COMPAK®
COFFEE GRINDING COMPANY

EXPLODED TECHNICAL DRAWING

E10 Essential Conic On Demand

Updated 21/10/2020

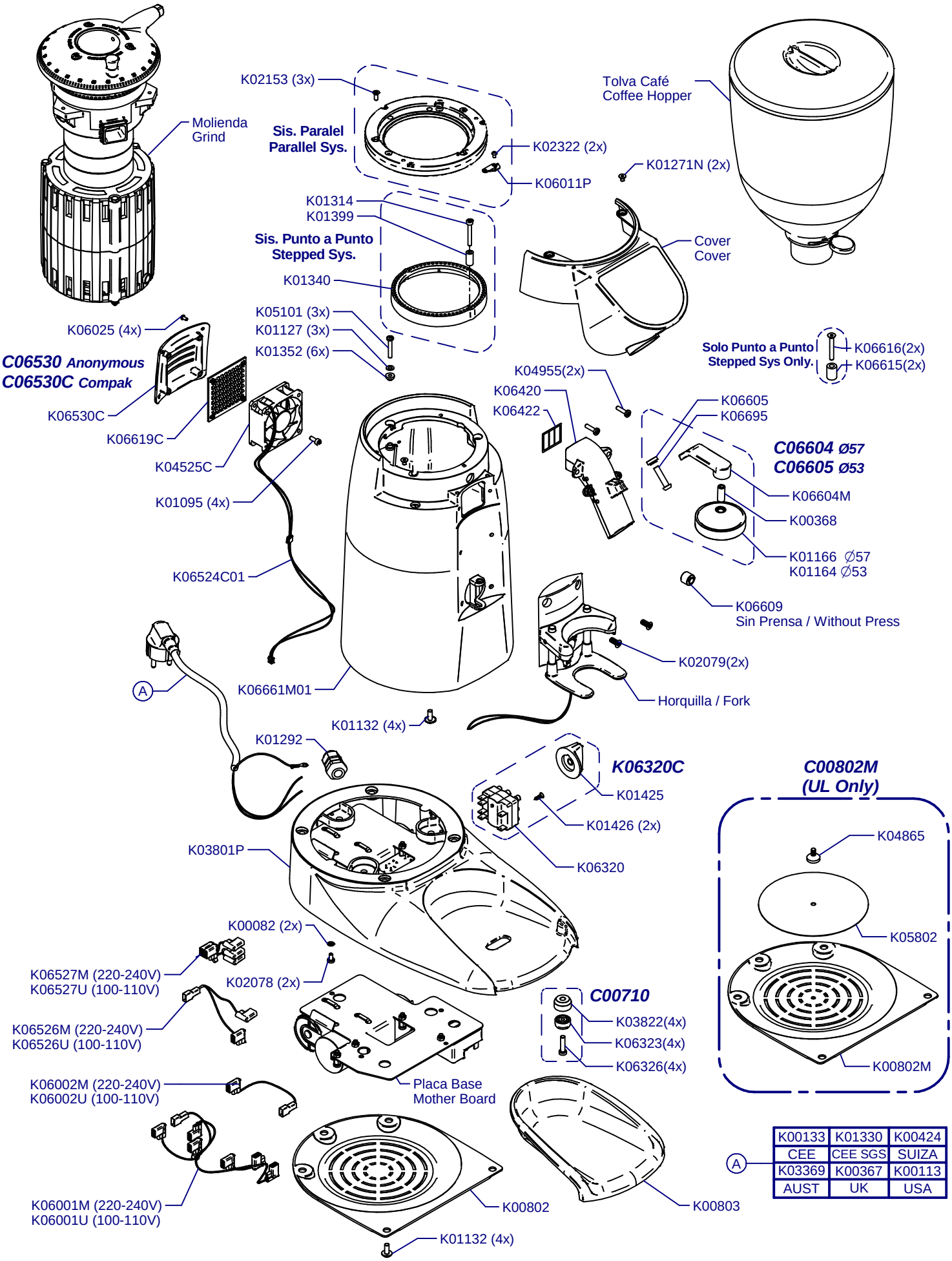

K00133	K01330	K00424
CEE	CEE SGS	SUIZA
K03369	K00367	K00113
AUST	UK	USA

(A)

COMPAK®
COFFEE GRINDING COMPANY

EXPLODED TECHNICAL DRAWING

E10 Essential Conic On Demand

Updated 21/10/2020

Tolva Café / Coffee Hopper
K01358

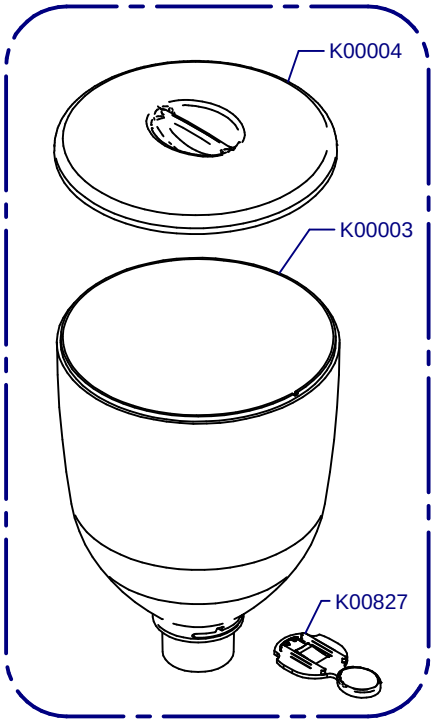

Horquilla / Fork

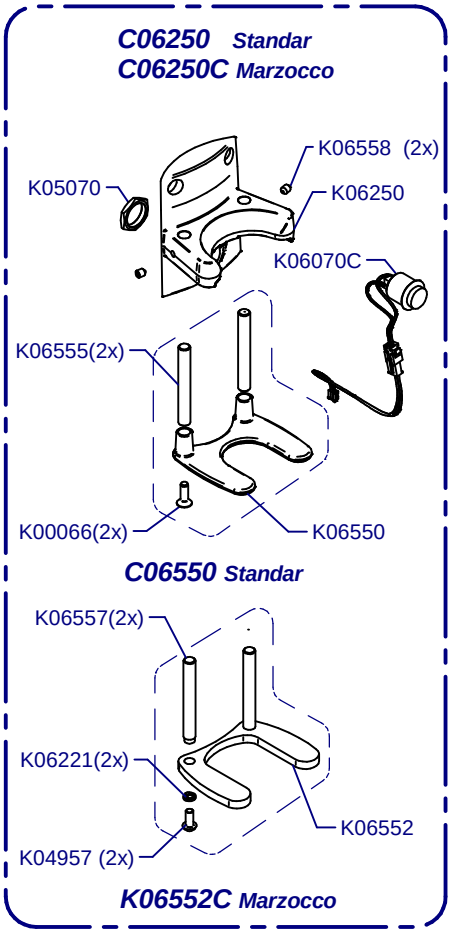

Portafilter Detector

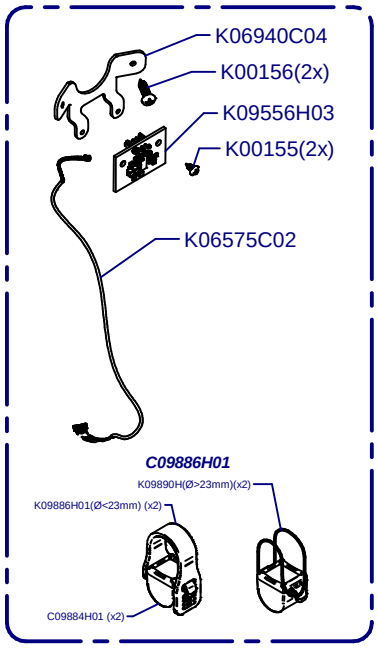

Cover / Cover

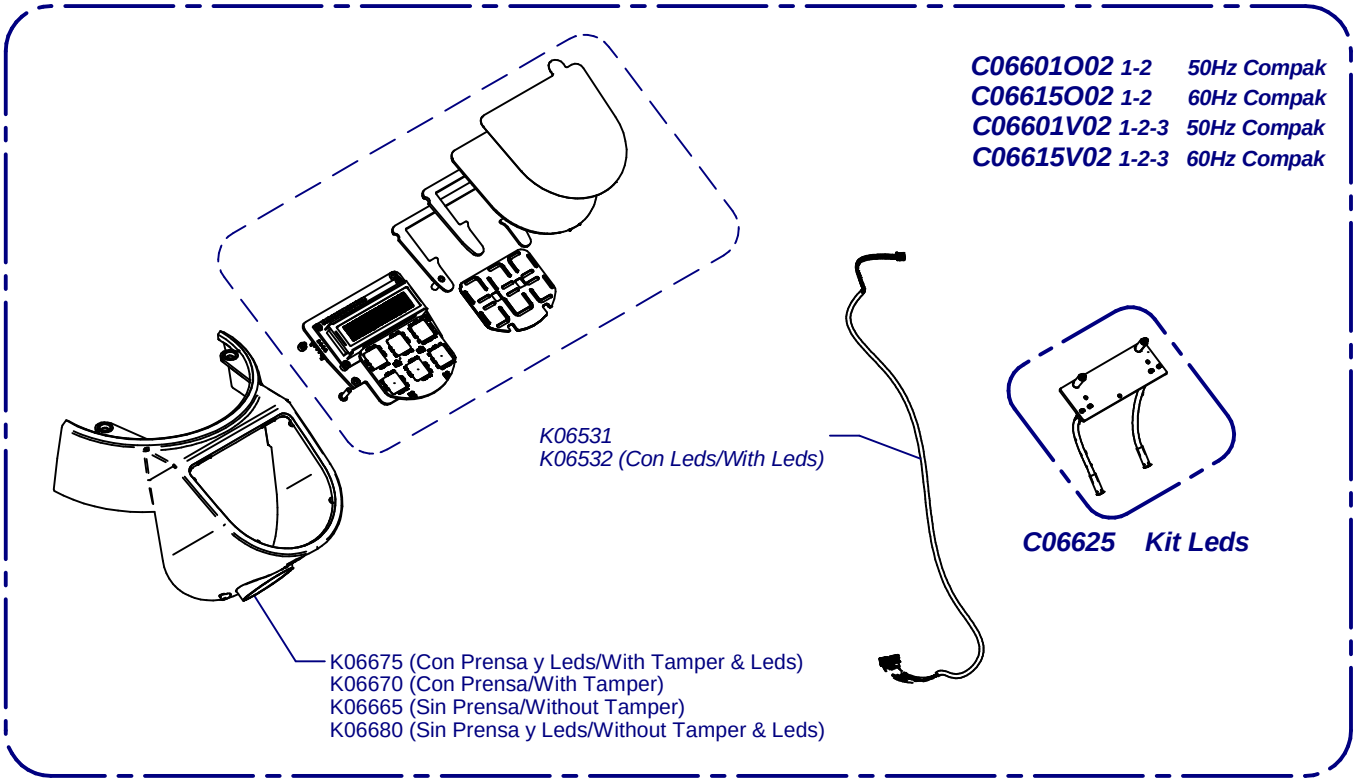

COMPAK®
COFFEE GRINDING COMPANY

EXPLODED TECHNICAL DRAWING

E10 Essential Conic On Demand

Updated 21/10/2020

Molienda / Grind

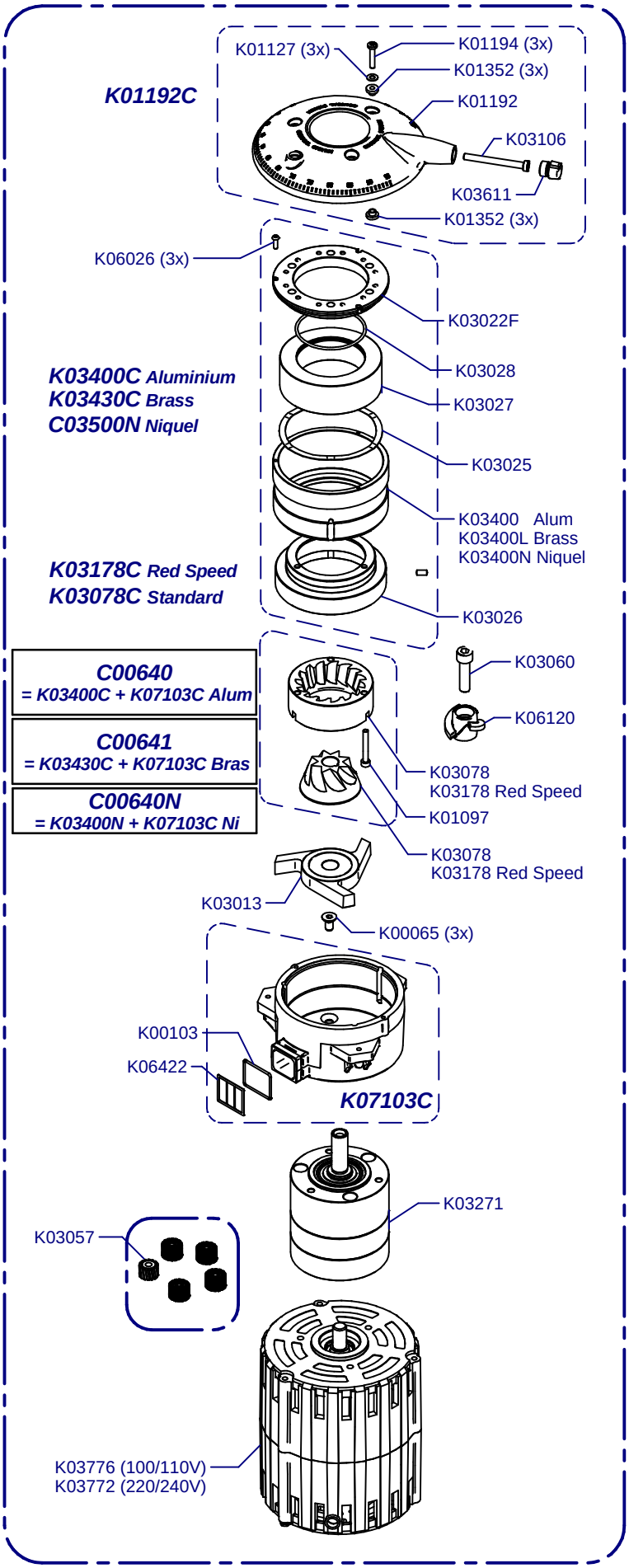

Placa Base / Mother Board

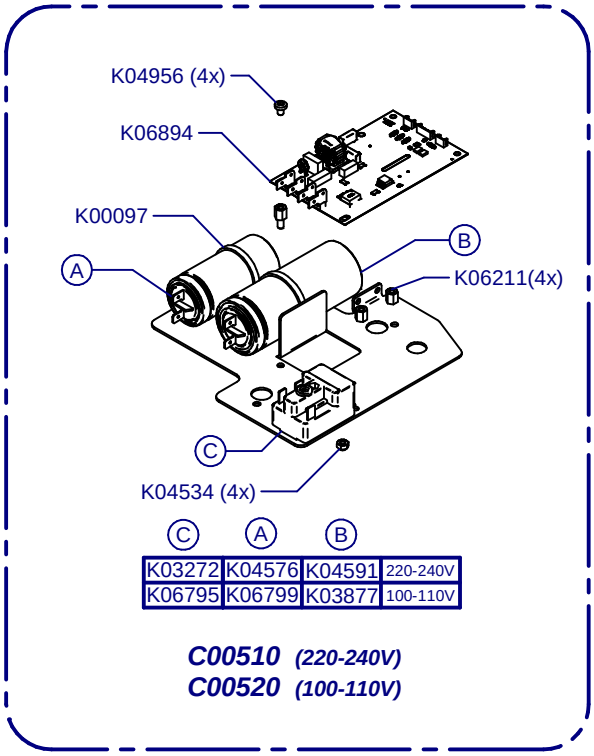

Sis. Paralel / Parallel Sys.

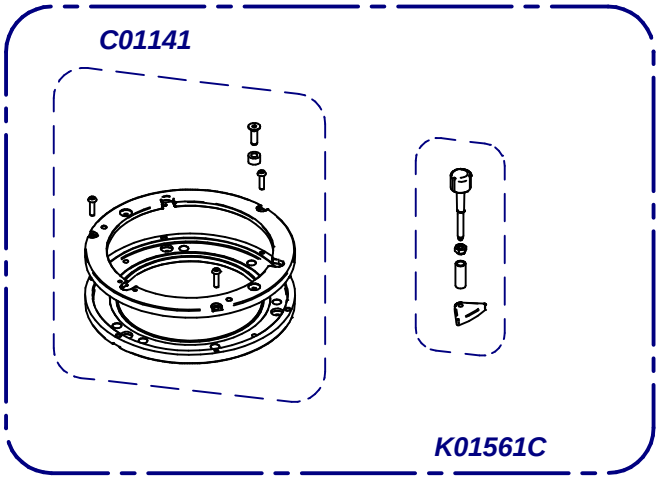
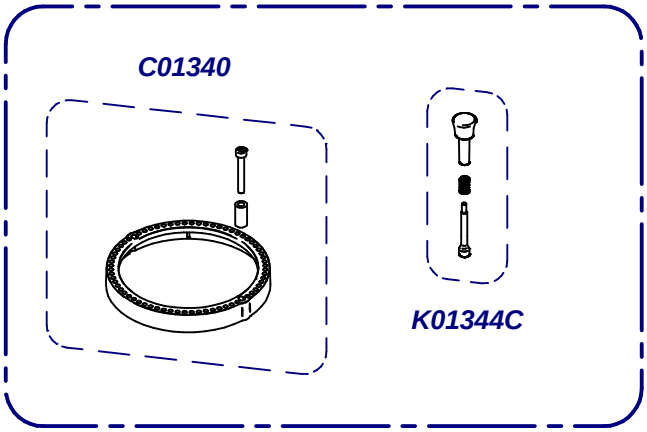
Sis. Punto a Punto / Stepped Sys.